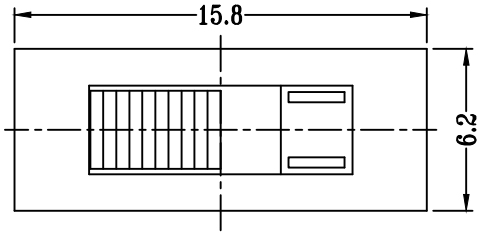

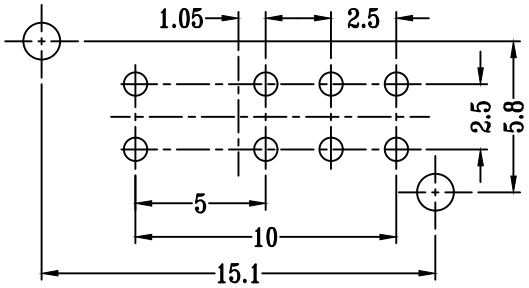

P.C.B LAYOUT
BOTTOM VIEW

SS-23E05-GXXX

直柄

G-Switch P/N

Switch Height (mm)
G020=2.0 G030=3.0
G040=4.0 G050=5.0
G055=5.5 G060=6.0
G065=6.5 G070=7.0
G075=7.5 G080=8.0
G085=8.5 G090=9.0
G095=9.5 G100=10.0

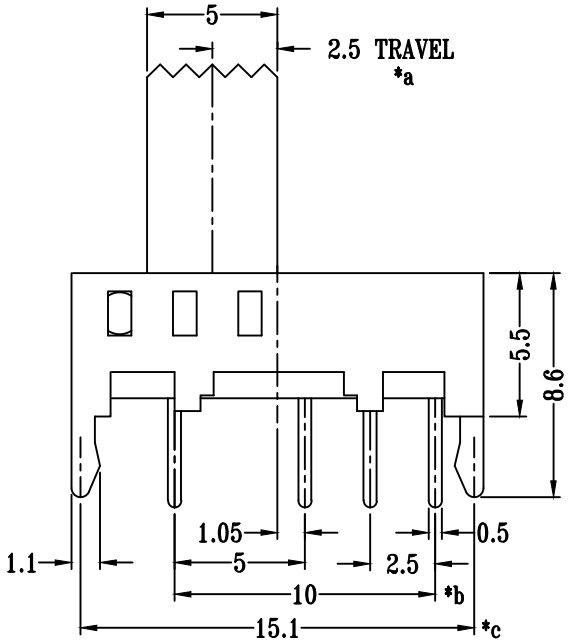

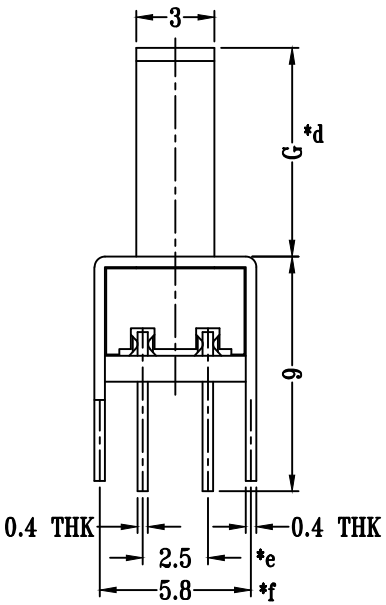

G-Switch Specification:
Electrical Specifications：1.0A/DC24V
Contact resistance (CR)：≤50mΩ
Insulation Resistance(IR：≥100MΩ DC250V
Compressive strength (WV)：AC250V 1minute
Operating temperature：-25°C~+70°C
Storage humidity：<85%RH
Electrical life：10,000Cycles.

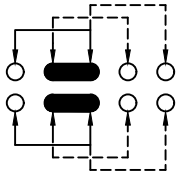

SCHEMATIC (SHORTING)

Pb Process Capable

RoHS Compliant 2002/95/EC

HALOGEN Compliant Halogen Free

品赞科技 b-Switch ®

G-Switch Electronic (HongKong) CO.,Ltd.

Unless otherwise specified, Tolerance:

X.	±0.30
X.x	±0.20
X.xx	±0.15
X.xxx	±0.10
Angles	±3°

DESIGN FengFengChen	DATE 2019.05.29	Molde code: SS-23E05-GXXX	
CHECKED	DATE		
APPROVED	DATE		
http://www.dg-switch.com	REV.: X1	SCALE: 4:1	UNIT: mm
TEL:0769-82388879	SIZE: A4	SHEET: 1/1	